6.2 Power Board

715G1646-1

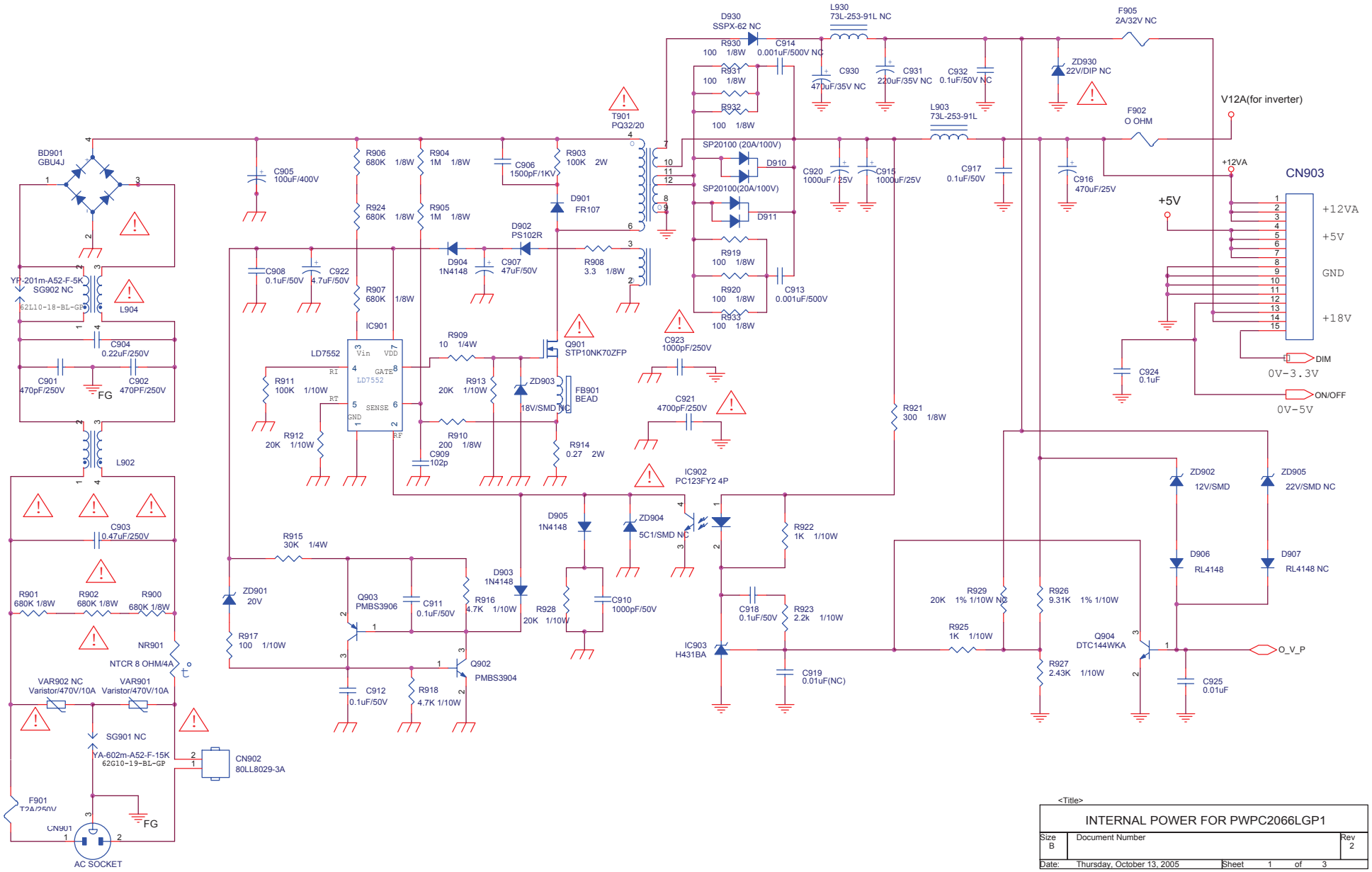

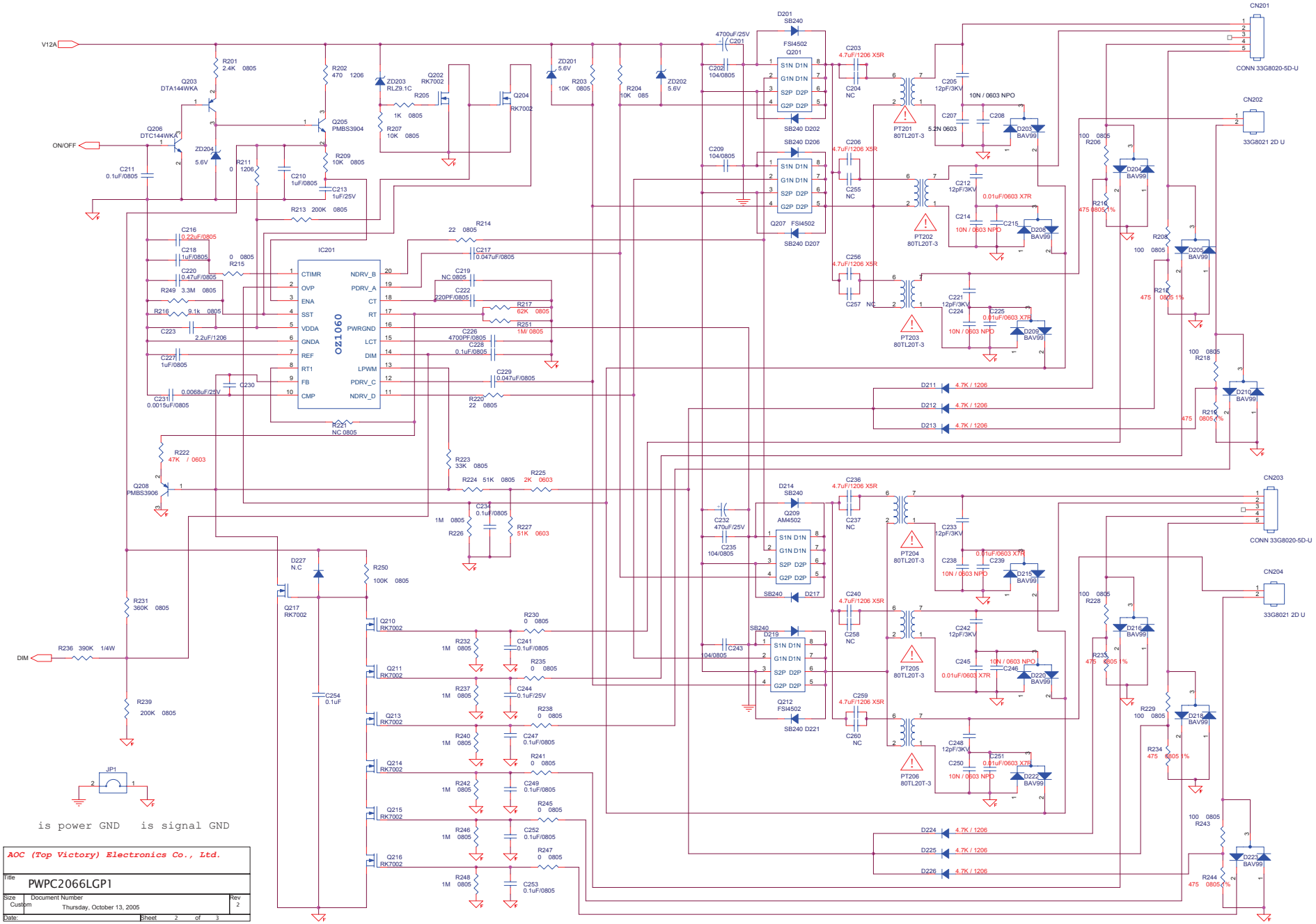

AOC (Top Victory) Electronics Co., Ltd.	
Title	PWPC2066LGP1
Size: Custom	Document Number: Thursday, October 13, 2005
Rev	2
Date:	Sheet 2 of 3

7.2 Power Board

715G1646-1

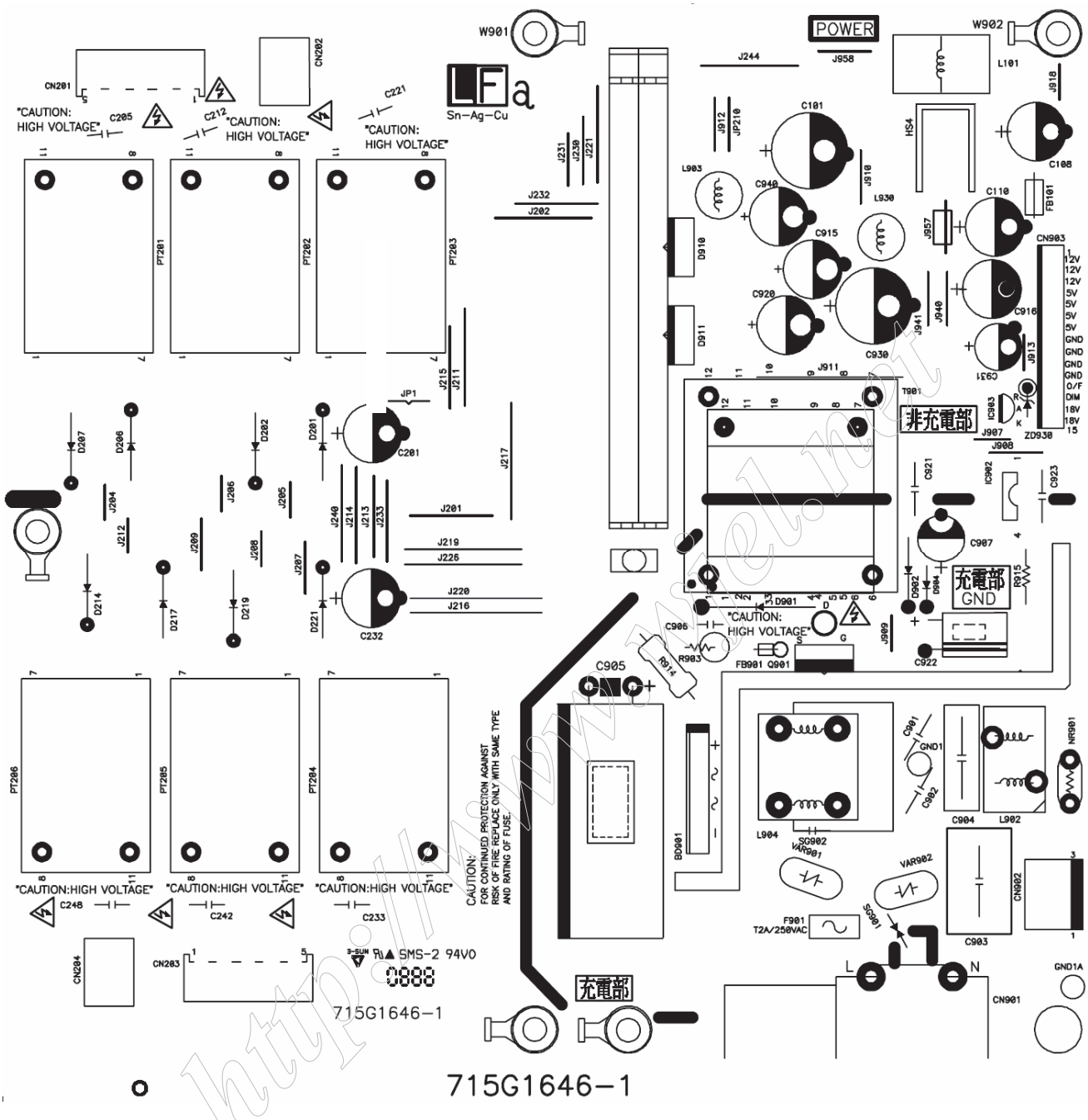

7.3 KEYPAD BOARD
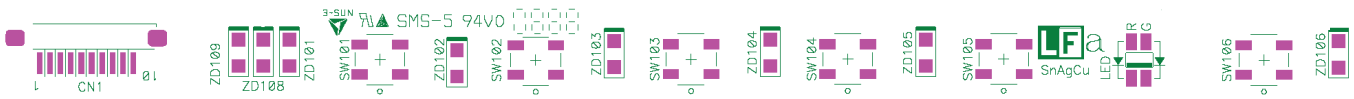
715G1725-1